Code Nakshatra 2.0 2026

SpectreX

- **Problem Statement Title-** Smart Energy Saver
- **Theme-** Eliminating Phantom Power Loss using IoT
- **Team Name -** SpectreX

SpectreX

SpectreX

❖Proposed Solution

- **IoT-Based Energy Management:** Smart system designed to eliminate phantom power consumption through **automated control** and intelligent monitoring.
- **Real-Time Monitoring:** Continuously tracks current usage using **ACS712 sensors** to accurately detect **active and idle devices.**
- **Embedded Processing (ESP32):** Microcontroller performs **data analysis** and enables **intelligent decision-making** for efficient **energy optimization.**
- **Automated Power Control (Relay):** System uses **threshold detection** and **time-delay logic** to disconnect power during **idle conditions.**
- **User Interface & Control:** Provides **manual override**, **remote monitoring**, and improved **user accessibility** through connected applications.
- **Scalable Smart System:** Designed for **scalability** and **real-world deployment** across **homes, offices**, and **industrial environments.**

An intelligent IoT-driven solution for automated energy optimization, smart control, and sustainable power management.

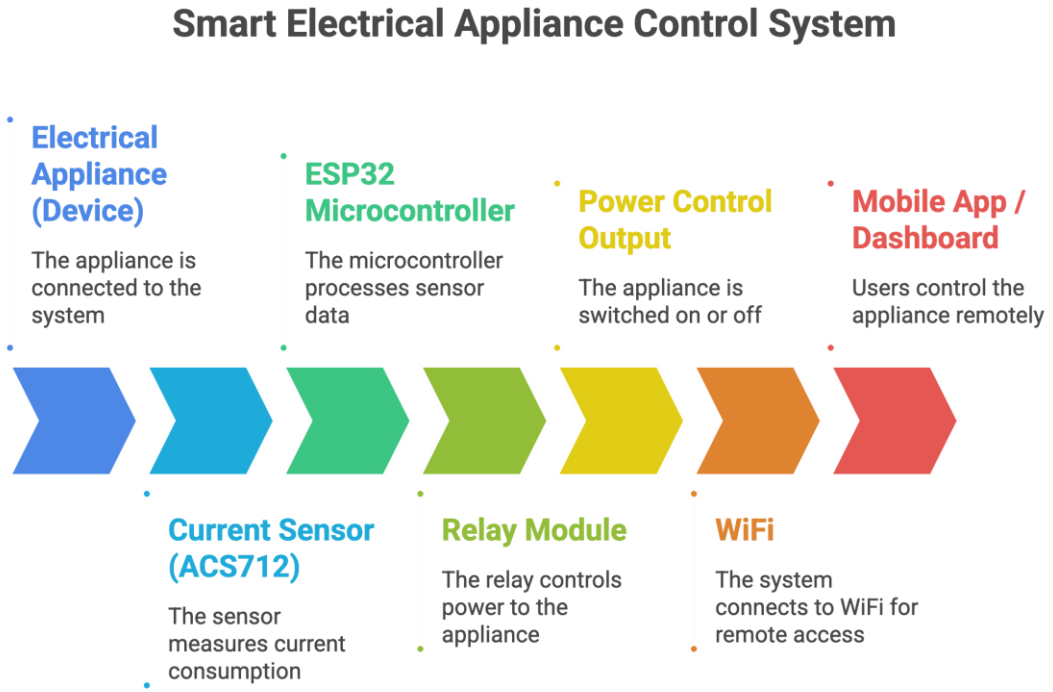

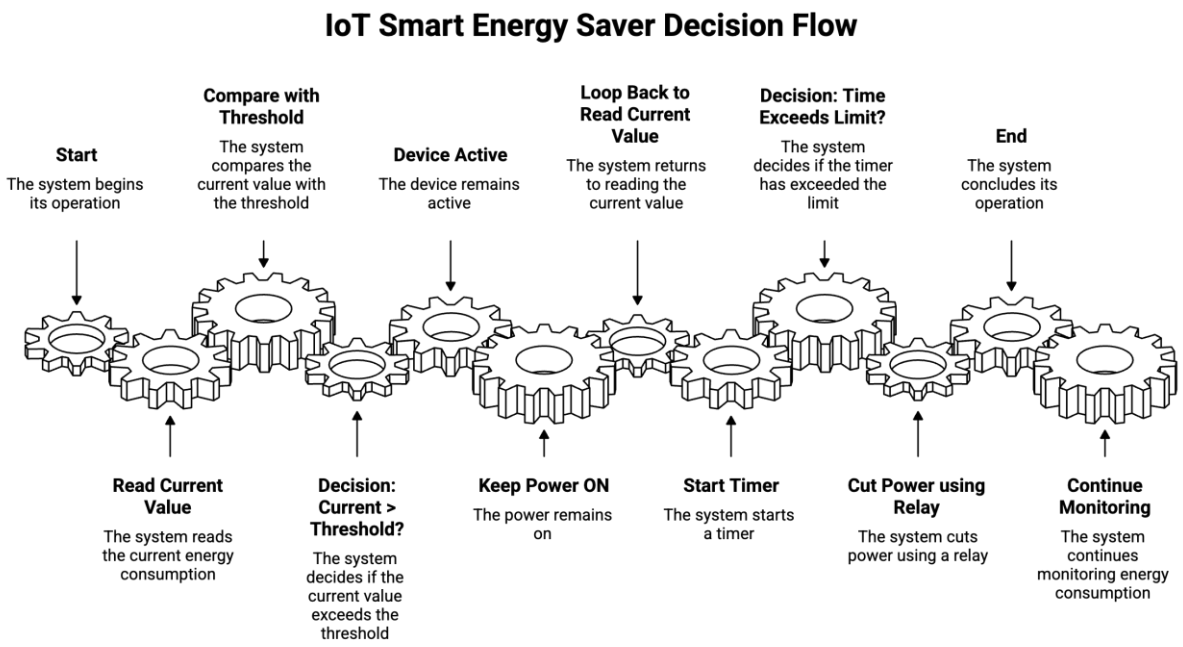

Made with Napkin

SpectreX

TECHNICAL APPROACH

❖ Technology Stack

- **Frontend Interface:** Enables **real-time monitoring** and smooth **user interaction** through a simple dashboard.
- **Embedded System (ESP32):** Performs **data processing** and supports **intelligent decision-making** for energy optimization.
- **Sensing Layer (ACS712):** Uses **current sensing technology** to track **power consumption** and detect **idle devices**.
- **Control Mechanism (Relay Module):** Provides **automated power switching** using **threshold detection** and **time-delay logic.**
- **Connectivity (WiFi/IoT):** Ensures **wireless communication** for **remote monitoring** and control via app/dashboard.
- **System Integration:** Combines **IoT, Embedded Systems, and Automation** to deliver **a scalable energy management solution.**

Smart Energy Saver IoT System Architecture

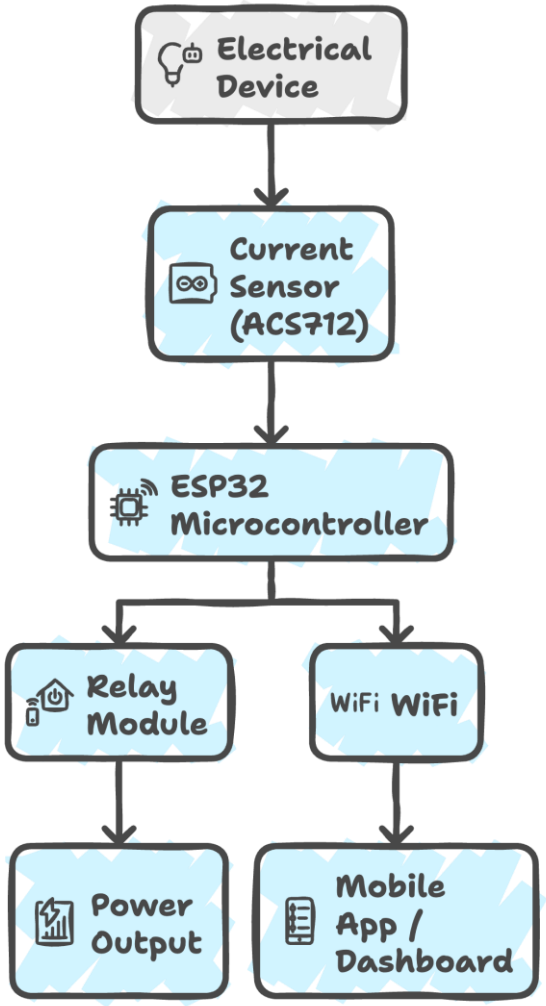

SpectreX

IMPACT AND BENEFITS

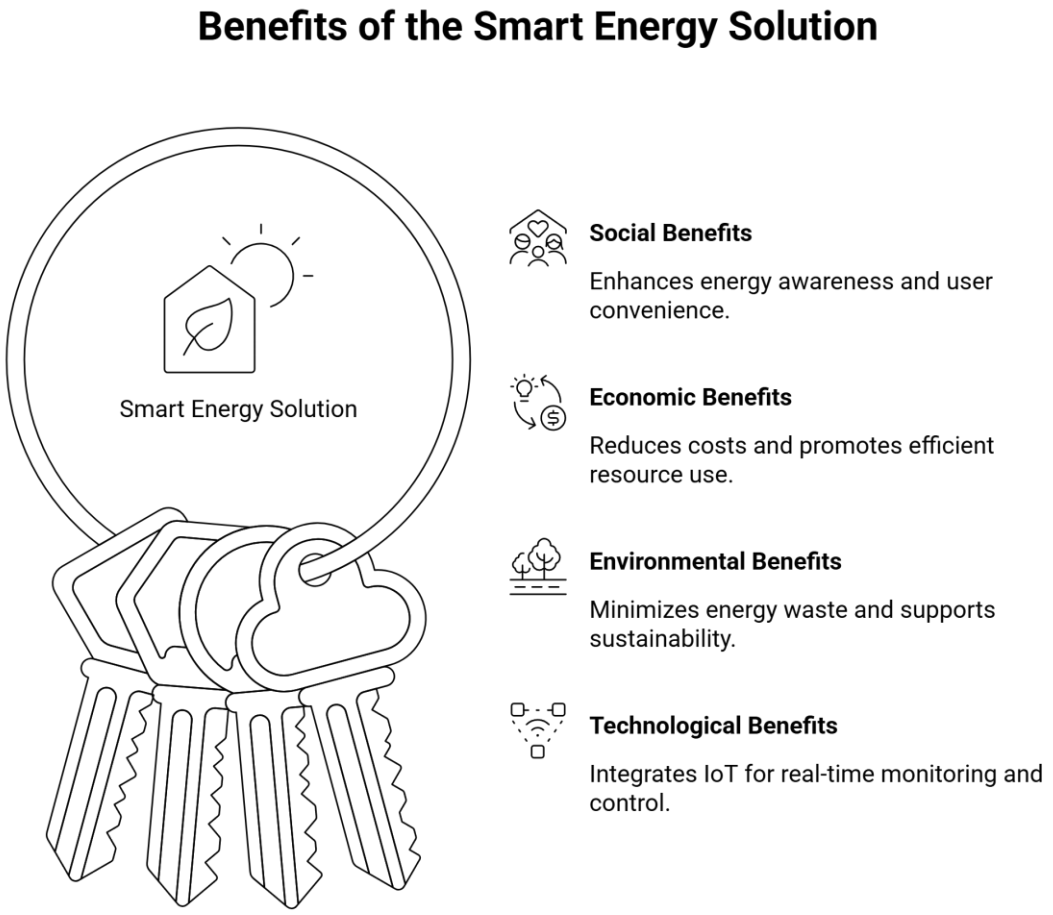

❖ Initial Impact on target audience

The Smart Energy Saver enables users to **reduce energy waste** through **real-time monitoring** and **automated power control**, resulting in lower electricity bills, improved awareness, and a more convenient energy management experience.

❖ Befits of the Solution

Social

- Promotes **energy awareness** among users by highlighting **hidden power consumption.**
- Encourages responsible usage through **automated energy management.**

Economic

- Helps **reduce electricity bills** by eliminating **phantom power loss.**
- Provides a **cost-effective solution** compared to advanced **smart systems.**

Environmental

- Minimizes **energy wastage**, contributing to **sustainable energy usage.**
- Reduces **carbon footprint** by lowering unnecessary electricity consumption.
- Supports global goals like **SDG 7 (Clean Energy) and SDG 13 (Climate Action)**

Technological

- Integrates **IoT, Embedded Systems**, and **Automation** for **smart energy control.**
- Enables **real-time monitoring** and intelligent **decision-making.**
- Provides a foundation for future **AI-based energy optimization systems.**

SpectreX

FEASIBILITY AND VIABILITY

Feasibility:

1. Technical Feasibility: Uses IoT and embedded systems with proven hardware components.
2. Implementation Feasibility: Supports modular design for easy deployment.
3. Economic Feasibility: Built with low-cost components for affordable scaling.
4. Operational Feasibility: Ensures simple setup and minimal maintenance.

Viability:

1. Scalability: Expands from single-device to multi-device systems.
2. Market Demand: Rising need for smart energy solutions.
3. Long-Term Value: Provides continuous cost savings and efficiency.
4. Sustainability: Supports green energy and smart infrastructure.

Challenges:

1. Detection Accuracy: Difficulty in idle vs active current identification.
2. User Adoption: Resistance to automated control systems.
3. Sensor Noise: Fluctuations in readings affect accuracy.
4. Compatibility: Integration with different appliances.

Solutions:

1. Adaptive Threshold: Uses dynamic threshold detection with delay logic.
2. Calibration: Applies noise filtering and sensor tuning.
3. User Control: Provides manual override options.
4. Safety Design: Ensures secure relay and electrical protection.

Use Cases:

1. Residential: Reduces household energy waste.
2. Offices: Optimizes multi-device power usage.
3. Smart Homes: Enables IoT-based automation.
4. Industrial: Improves machine energy efficiency.

Business Potential:

1. Market Growth: Expanding IoT energy market.
2. Cost Benefit: Focus on bill reduction solutions.
3. Product Scope: Can evolve into smart plug systems.
4. Startup Opportunity: Potential for commercial scaling.

❖ Supporting Facts For Feasibility and Viability

- Standby (phantom) power accounts for 5–10% of household electricity consumption.
https://www.tatapower.com/blogs/phantom-energy-will-cost-you
- In India, phantom energy can waste ₹1500–₹3000 annually per household.
https://www.tatapower.com/blogs/phantom-energy-will-cost-you
- Studies show standby devices consume 0.1W–3W continuously, leading to long-term energy loss.
https://www.researchgate.net/publication/373241560
- Government-backed estimates show significant annual energy loss (hundreds of kWh per household) due to standby usage.
https://www.cag.org.in/newsletters/public-newsense/standby-power-consumption-energy-saving-opportunity
- Research highlights that real-time monitoring systems improve energy efficiency and awareness.
https://arxiv.org/abs/1703.00785

SpectreX

RESEARCH AND REFERENCES

❖ References

. Energy And Phantom Power

Tata Power – Phantom Energy Awareness
https://www.tatapower.com/blogs/phantom-energy-will-cost-you

Consumer Affairs India – Standby Power Consumption
https://www.cag.org.in/newsletters/public-newsense/standby-power-consumption-energy-saving-opportunity

. Research Papers

Standby Power Consumption Study (ResearchGate)
https://www.researchgate.net/publication/373241560

Energy Monitoring using IoT (arXiv)
https://arxiv.org/abs/1703.00785

. Technology References

ESP32 Documentation
https://docs.espressif.com

ACS712 Sensor Datasheet
https://www.allegromicro.com

COMPARISON WITH EXISTING SOLUTIONS

FEATURE	OUR SYSTEM (Smart Energy Saver)	SMART PLUG	MANUAL SWITCH	BASIC TIMER
Automatic Idle Detection	✓	✗	✗	✗
Real-Time Monitoring	✓	Limited	✗	✗
Phantom Power Elimination	✓	✗	✗	✗
Automated Power Cut-off	✓	Partial	✗	Limited
User Control (Override)	✓	✓	✗	Limited
Energy Efficiency Optimization	✓	✗	✗	✗
Cost Effectiveness	✓	Expensive	✓	✓
Smart Decision Making	✓	✗	✗	✗

Our Smart Energy Saver **intelligently detects** and eliminates phantom power, offering **real-time monitoring, automation**, and **cost-effective** energy savings.

RESEARCH WORKFLOW

Problem Identification → Requirement Analysis → System Design & Development → Testing & Evaluation